US006479808B1

(12) **United States Patent**
Schwemmer

(10) **Patent No.: US 6,479,808 B1**
(45) **Date of Patent: Nov. 12, 2002**

(54) **METHOD AND SYSTEMS FOR COLLECTING DATA FROM MULTIPLE FIELDS OF VIEW**

(75) Inventor: **Geary K. Schwemmer**, Hampstead, MD (US)

(73) Assignee: **The United States of America as represented by the Administrator of the National Aeronautics and Space Administration**, Washington, DC (US)

(*) Notice: Subject to any disclaimer, the term of this patent is extended or adjusted under 35 U.S.C. 154(b) by 308 days.

(21) Appl. No.: **09/605,649**

(22) Filed: **Jun. 28, 2000**

Related U.S. Application Data

(60) Provisional application No. 60/142,527, filed on Jul. 7, 1999.

(51) **Int. Cl.**[7] **G02B 7/04**

(52) **U.S. Cl.** **250/201.5**; 250/201.4; 250/208.1

(58) **Field of Search** 250/201.5, 201.4, 250/208.1, 216, 201.8

(56) **References Cited**

U.S. PATENT DOCUMENTS

5,569,904 A * 10/1996 Meyers 250/201.8

* cited by examiner

Primary Examiner—Hung Xuan Dang
(74) *Attorney, Agent, or Firm*—Keith L. Dixon

(57) **ABSTRACT**

Systems and methods for processing light from multiple fields (**48**, **54**, **55**) of view without excessive machinery for scanning optical elements. In an exemplary embodiment of the invention, multiple holographic optical elements (**41**, **42**, **43**, **44**, **45**), integrated on a common film (**4**), diffract and project light from respective fields of view.

17 Claims, 6 Drawing Sheets

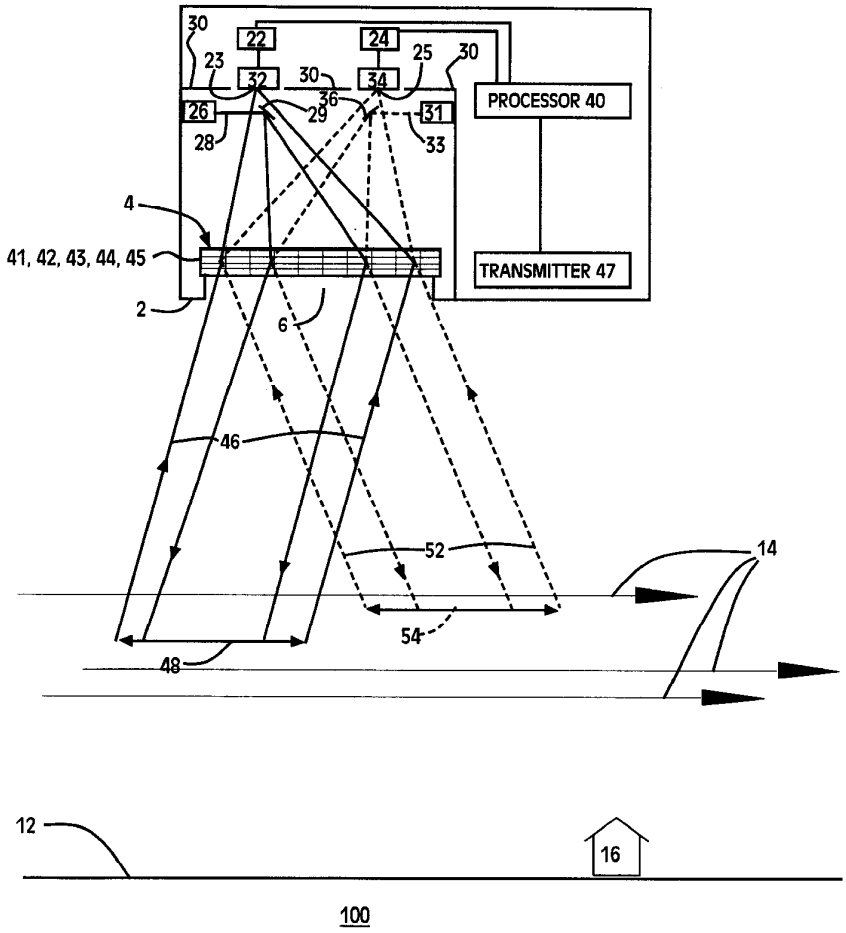

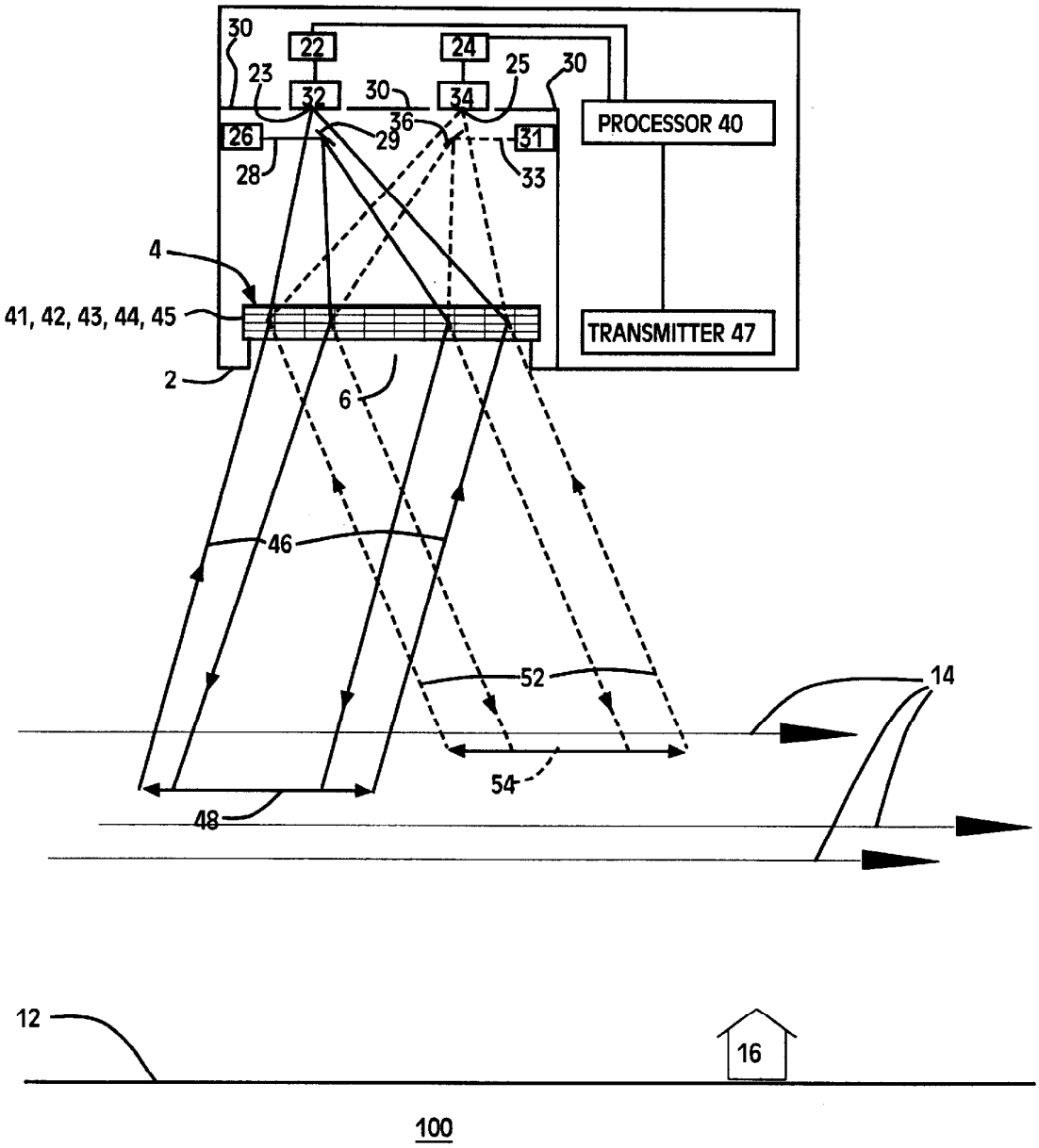
30
22
24
23
25
30
32
30
34
36
PROCESSOR 40
26
29
31
28
33
4
41, 42, 43, 44, 45
TRANSMITTER 47
2
6
46
52
14
54
48
12
16
100

Fig. 1

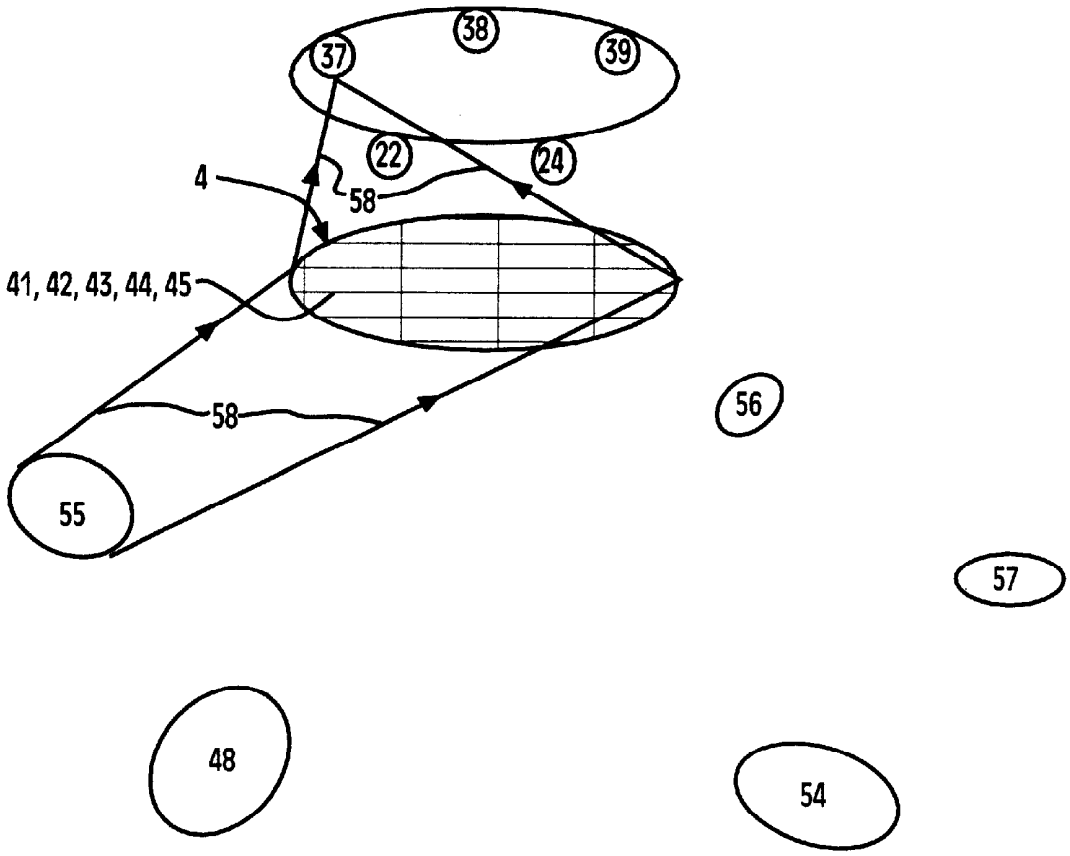

Fig. 2

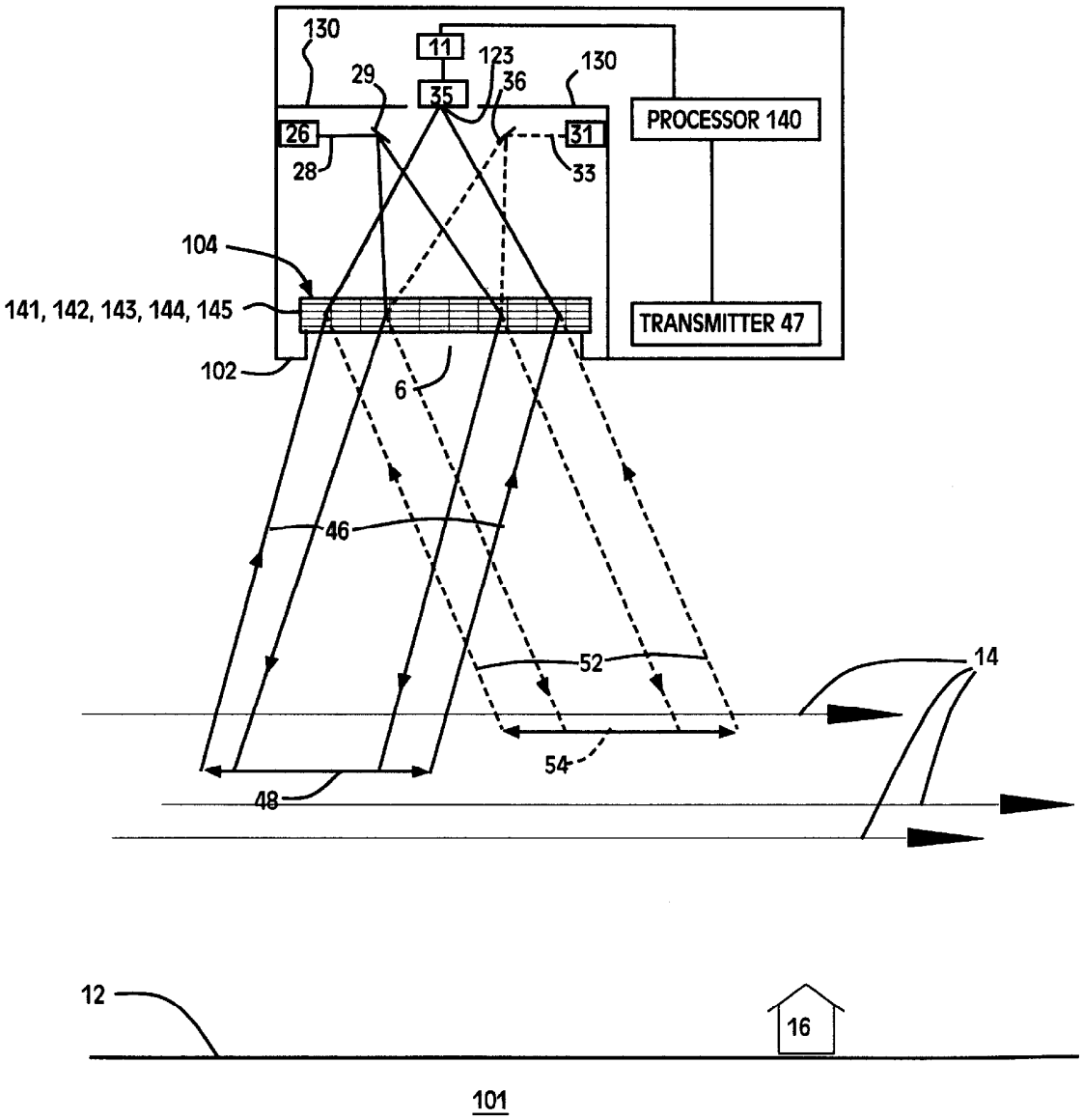
130
11
123
130
29
35
36
PROCESSOR 140
26
31
28
33
104
141, 142, 143, 144, 145
TRANSMITTER 47
102
6
46
52
14
54
48
12
16
101

Fig. 3

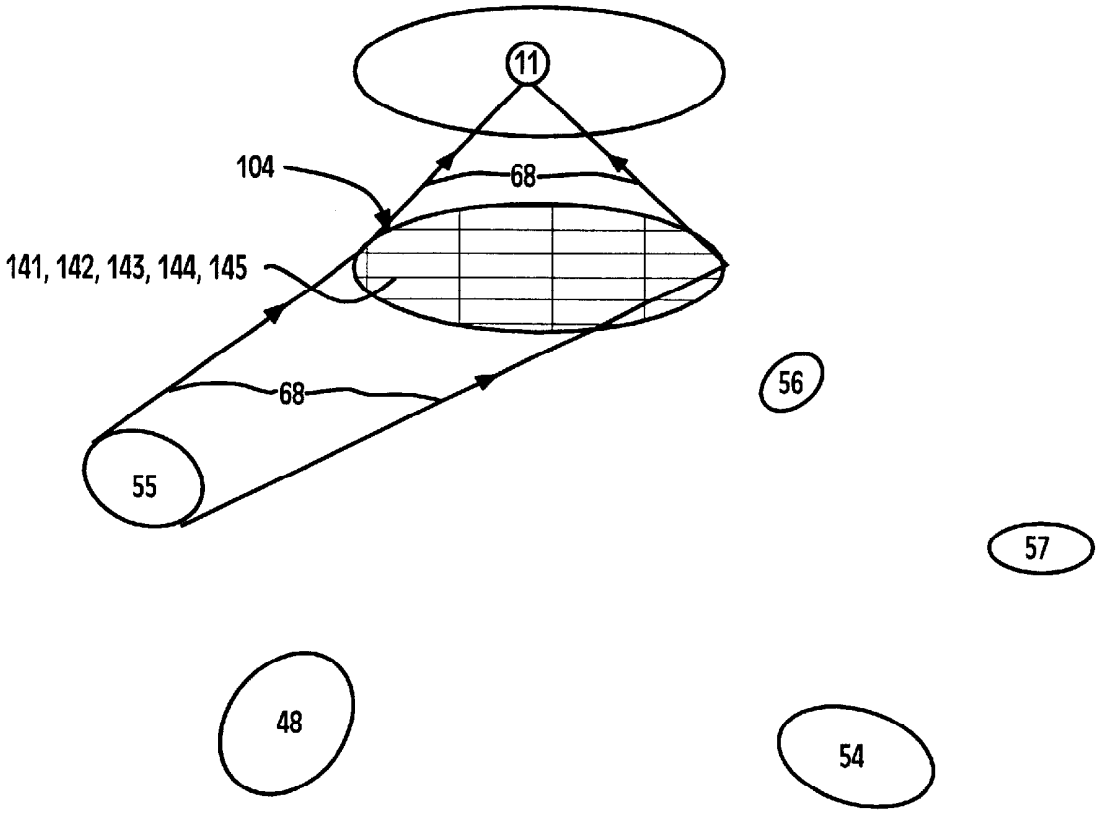

Fig. 4

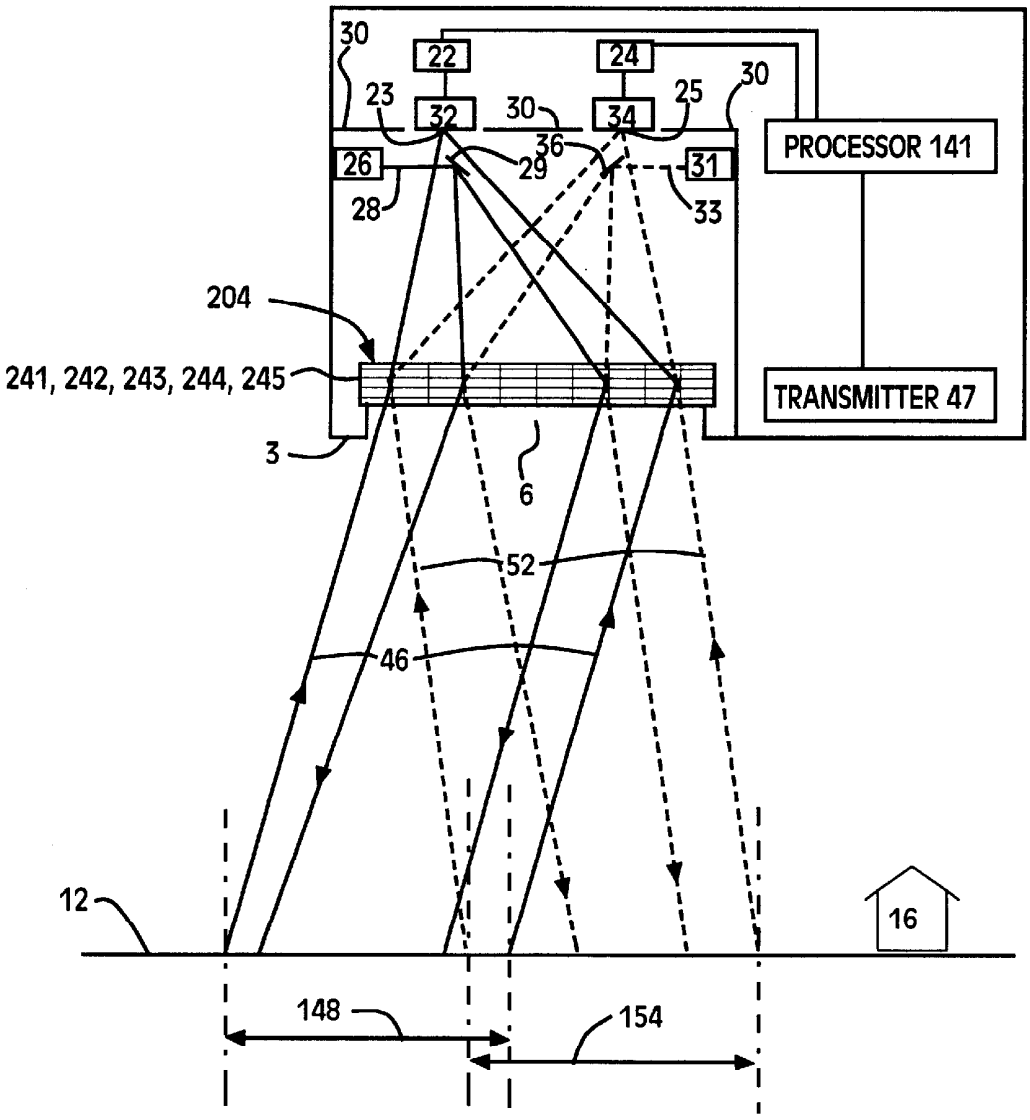
30
22
24
23
32
30
34
25
30
26
29
36
31
PROCESSOR 141
28
33
204
241, 242, 243, 244, 245
TRANSMITTER 47
3
6
52
46
12
16
148
154

Fig. 5

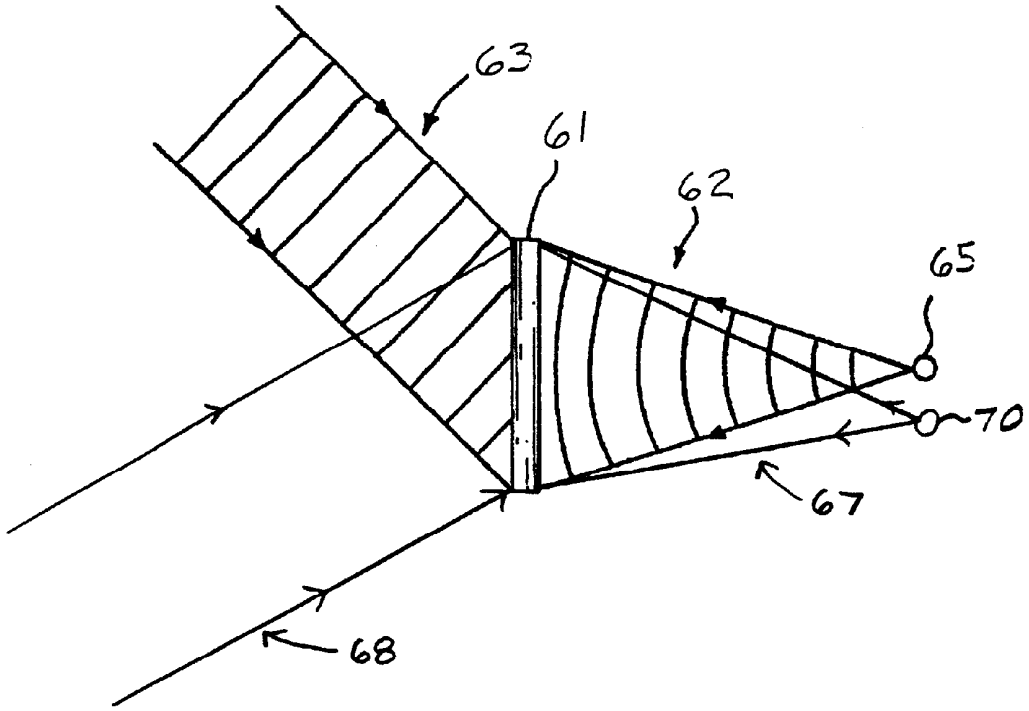

Fig. 6

METHOD AND SYSTEMS FOR COLLECTING DATA FROM MULTIPLE FIELDS OF VIEW

CROSS-REFERENCES TO RELATED APPLICATIONS

This Application claims the benefit of application Ser. No. 60/142,527 of Geary Karl Schwemmer filed Jul. 7, 1999 for SHARED APERTURE MULTIPLEXED HOLOGRAPHIC SCANNING TELESCOPE, the contents of which are herein incorporated by reference.

ORIGIN OF THE INVENTION

The invention described herein was made by an employee of the United States Government, and may be manufactured and used by or for the Government for governmental purposes without the payment of royalties thereon or therefor.

BACKGROUND OF THE INVENTION

1. Technical Field

This invention relates generally to optical observations and, more particularly, to methods and systems for collecting data from multiple fields of view.

2. Background Art

Telescopes typically are required to operate through multiple fields of view. This requirement may result from the area of interest being larger than a single field of view of the telescope. For example, in terrain mapping applications, the terrain of interest may be larger then a single field of view of the telescope.

Operating through multiple fields of view may also be desirable in applications, such as wind monitoring, that benefit from multiple viewing angles.

STATEMENT OF THE INVENTION

It is an object of the present invention to provide relatively efficient methods and systems for collecting data from multiple fields of view.

To achieve this and other objects of the present invention, a method comprises receiving light from a first field; responsive to a wavelength received in the previous step, projecting from an optical assembly to a first location; detecting light projected in the previous step; receiving light from a second field; responsive to the wavelength received in the previous step, projecting from the optical assembly; detecting light projected in the previous step; and processing a result of the detecting steps, wherein the optical assembly is stationary relative to the first location.

According to another aspect of the present invention, a system comprises a first projector that projects light received from a first field to a first location; a detector that generates electrical signal responsive to light from the first projector; a second projector that projects light received from a second field; and a processor that receives and processes electrical signals representing light from first and second projectors, wherein the first and second projectors are stationary relative to the detector.

According to yet another aspect of the present invention, a system comprises means for receiving light from a first field; means responsive to a wavelength received by the previous means, for projecting from an optical assembly to a first location; means for detecting light projected by the previous mean s; means for receiving light from a second field; means responsive to the wavelength received in the previous step, for projecting from the optical assembly; means detecting light projected by the previous means; and means for processing signals from the detecting means, wherein the optical assembly is stationary relative to the detecting means.

BRIEF DESCRIPTION OF THE DRAWINGS

FIG. **1** is a diagram of a satellite having multiple fields of view according to a first preferred embodiment of the invention.

FIG. **2** is a diagram showing another aspect of a satellite and fields of view of FIG. **1**.

FIG. **3** is a diagram of a satellite having multiple fields of view according to a second preferred embodiment of the invention.

FIG. **4** is a diagram showing another aspect of a satellite and fields of view of FIG. **3**.

FIG. **5** is a diagram of another satellite having multiple fields of view according to a second preferred embodiment of the invention.

FIG. **6** is a diagram for describing how make to a component of a preferred embodiment of the invention.

The accompanying drawings which are incorporated in and which constitute a part of this specification, illustrate embodiments of the invention and, together with the description, explain the principles and advantages of the invention. Throughout the drawings, corresponding parts are labeled with corresponding reference numbers.

DESCRIPTION OF THE PREFERRED EMBODIMENTS

FIG. **1** shows system **100** including satellite **2** in orbit over ground **12** in accordance with a first preferred embodiment of the present invention. Satellite **2** operates in a wind profiling mode by collecting data about winds **14** and transmitting the data to ground station **16** via transmitter **47** on satellite **2**.

Satellite **2** includes light box **30** defining an aperture **6** through which light from outside of satellite **2** impinges on holographic unit **4**. Satellite **2** includes a transparent glass (not shown) in aperture **6**.

Light box **30** also defines **5** other windows through which light may travel from holographic unit **4** to respective light detectors. FIG. **1** shows **2** of the **5** other windows: field stop aperture **23** through which light may travel from holographic unit **4** to focal plane optics **32** to light detector **22**; and field stop aperture **25** through which light may travel from holographic unit **4** to focal plane optics **34** to light detector **24**.

Holographic unit **4** acts to selectively diffract received light depending on angle and wavelength. Holographic unit **4** transmits the remainder of the received light undiffracted.

Holographic unit **4** includes holographic optical elements (HOEs) **41**, **42**, **43**, **44**, and **45**. Each of HOEs **41**, **42**, **43**, **44**, and **45** is a volume phase hologram having optical focusing power. Each of HOEs **41**, **42**, **43**, **44**, and **45** is embedded in a common holographic film by multiple exposure such that each HOE acts on a different set of light rays corresponding to a specific wavelength and angle of incidence. Provided: there is sufficient angular separation between the planes of diffraction of the HOEs, the impact of each HOE on the performance of the others will be acceptable.

All 5 HOEs share the same full physical aperture **6** for the collection of light rays. Each hologram has a moderately

wide field-of-view, and acts as a separate telescope looking in its own direction, with its own focus. Thus, holographic unit **4** has an effective wide-field spectral imaging capability.

Processor **40** includes circuitry to determine a wind profile. In this Disclosure, the term circuitry encompasses both dedicated hardware and programmable hardware, such as a CPU or reconfigurable logic array, in combination with programming data, such as sequentially fetched CPU instructions or programming data for a reconfigurable logic array.

Processor **40** includes circuitry to control laser **26**, causing laser **26** to emit laser beam **28** towards mirror **29**. Laser light reflected from mirror **29** travels to holographic unit **4**. Holographic unit **4** diffracts and collimates the light from mirror **29** to illuminate field of view **48**.

Laser light **28** back scattered from field of view **48** is depicted by solid lines **46** in FIG. **1**. Back scattered laser light **46** travels from field of view **48** to holographic unit **4**. Holographic unit **4** diffracts and focuses light **46** through field stop aperture **23**, to detector **22** via focal plane optics **32**.

Processor **40** includes circuitry to control laser **31**, causing laser **31** to emit laser beam **33** towards mirror **36**. Laser light reflected from mirror **36** travels to holographic unit **4**. Holographic unit **4** diffracts and collimates the light from mirror **36** to illuminate field of view **54**.

Laser light **33** back scattered from field of view **54** is depicted by dotted lines **52** in FIG. **1**. Back scattered laser light **52** travels from field of view **54** to holographic unit **4**. Holographic unit **4** diffracts and focuses light **52** through field stop aperture **25**, to detector **24** via focal plane optics **34**.

Processor **40** includes circuitry to process the detected signal from detector **22** and the detected signal from detector **24**, to send a signal to transmitter **47**. Responsive to the signal from processor **40**, transmitter **47** sends a signal to ground station **16**. Ground station **16** includes circuitry that receives and processes the signal transmitted by transmitter **47**.

FIG. **2** emphasizes another aspect of system **100**, including field of view **48**, field of view **54**, field of view **55**, field of view **56**, and field of view **57**. HOE **41** diffracts light from field **48** and focuses the diffracted light toward detector **22**. HOE **42** diffracts light from field of view **54** and focuses the diffracted light toward detector **24**. HOE **43** diffracts light from field of view **55** and focuses the diffracted light toward detector **37**, as shown by rays **58** in FIG. **2**. HOE **44** diffracts light from field of view **56** and focuses the diffracted light toward detector **38**. HOE **45** diffracts light from field of view **57** and focuses the diffracted light toward detector **39**.

In summary, HOE **41** of unit **4** acts to receive light from field **48** and, responsive to a wavelength from field **48**, HOE **41** projects to optics **32**. Detector **22** detects light from optics **32**. HOE **42** acts to receive light from fields **54** and, responsive to wavelength the from field **54**, HOE **42** projects to optics **34**. Detector **24** detects light form optics **34**. Processor **40** includes circuitry to process electrical signals generated by detectors **22** and **24**. Holographic unit **4** is stationary relative to optics **32**, detector **22**, optics **34**, and detector **24**.

In other words HOE **41** acts as a projector and HOE **42** acts as another projector.

FIG. **3** shows system **101** including satellite **102** in orbit over ground **12** in accordance with a second preferred embodiment of the present invention. Satellite **102** operates in a wind profiling mode by collecting data about winds **14** and transmitting the data to ground station **16** via transmitter **47** on satellite **102**.

Satellite **102** includes light box **130** defining an aperture **6** through which light from outside of satellite **102** impinges on holographic unit **104**. Satellite **102** includes a transparent glass (not shown) in aperture **6**.

Light box **130** also defines field stop aperture **123** through which light may travel from holographic unit **104** to focal plane optics **35** to light detector **11**.

Holographic unit **104** acts to selectively diffract received light depending on angle and wavelength. Holographic unit **104** transmits the remainder of the received light through the film undiffracted. Holographic unit **104** includes HOEs **141**, **142**, **143**, **144**, and **145**. Each of HOEs **141**, **142**, **143**, **144**, and **145** is a volume phase hologram having optical focusing power. Each of HOEs **141**, **142**, **143**, **144**, and **145** is embedded in a common holographic film by multiple exposure such that each HOE acts on a different set of light rays corresponding to a specific wavelength and angle of incidence.

All 5 holograms share the same full physical aperture **6** for the collection of light rays. Each hologram has a moderately wide field-of-view, and acts as a separate telescope looking in its own direction, with its own focus. Thus, holographic unit **104** has an effective wide-field spectral imaging capability.

Processor **140** includes circuitry to control laser **26**, causing laser **26** to emit laser beam **28** towards mirror **29**. Laser light reflected from mirror **29** travels to holographic unit **104**. Holographic unit **104** diffracts and collimates the light from mirror **29** to illuminate field of view **48**.

Laser light **28** back scattered from field of view **48** is depicted by solid lines **46** in FIG. **3**. Back scattered laser light **46** travels from field of view **48** to holographic unit **104**. Holographic unit **104** diffracts and focuses light **46** through field stop aperture **123**, to detector **11** via focal plane optics **35**.

Processor **140** includes circuitry to control laser **31**, causing laser **31** to emit laser beam **33** towards mirror **36**. Laser light reflected from mirror **36** travels to holographic unit **104**. Holographic unit **4** diffracts and collimates the light from mirror **36** to illuminate field of view **54**.

Laser light **33** back scattered from field of view **54** is depicted by dotted lines **52** in FIG. **3**. Back scattered laser light **52** travels from field of view **54** to holographic unit **104**. Holographic unit **104** diffracts and focuses light **52** through field stop aperture **123**, to detector **11** via focal plane optics **35**.

Processor **40** includes circuitry to process the detected signals from detector **11**, to send a signal to transmitter **47**. Responsive to the signal from processor **140**, transmitter **47** sends a signal to ground station **16**.

FIG. **4** emphasizes another aspect of system **101**, including field of view **48**, field of view **54**, field of view **55**, field of view **56**, and field of view **57**. HOE **141** diffracts light from field **48** and focuses the diffracted light toward detector **11**. HOE **142** diffracts light from field of view **54** and focuses the diffracted light toward detector **11**. HOE **143** diffracts light from field of view **55** and focuses the diffracted light toward detector **11**., as shown by rays **68** in FIG. **4**. HOE **144** diffracts light from field of view **56** and focuses the diffracted light toward detector **11**. HOE **145** diffracts light from field of view **57** and focuses the diffracted light toward detector **11**.

FIG. **5** shows system **103** including satellite **3** operating in a terrain mapping mode, collecting data from multiple ground footprints, in accordance with a third preferred embodiment for the present invention. Processor **141** includes circuitry to control lasers **26** and **31** and collect terrain map data. Points on ground **12** correspond to fixed points in the image planes of holographic unit **204**.

Holographic unit **204**, in satellite **3**, is a 5-exposure holographic element for the 1064 nm fundamental wavelength of the most common altimetry laser, Nd:YAG. Holographic unit **204** includes HOEs **241**, **242**, **243**, **244**, and **245**. Each of HOEs **241**, **242**, **243**, **244**, and **245** is a volume phase hologram having optical focusing power. Each of HOEs **241**, **242**, **243**, **244**, and **245** is embedded in a common holographic film by multiple exposure such that each HOE acts on a different set of light rays corresponding to a specific wavelength and angle of incidence. Holographic unit **204** has a diameter of approximately 25–30 cm. Each HOE is configured to image an extended target spanning a field of view of 9.5 degrees wide with at least 1 milliradian resolution over the entire field. A linear array of laser pulses across each field of view maps a 9.5 degree wide swath as the satellite **3** orbits overhead.

The five field of views of the second embodiment are laid out such that the ground-track swaths are contiguous with each other, creating a total 46 degree wide swath with a small amount of overlap between field of views.

Processor **141** includes circuitry to control laser **26**, causing laser **26** to emit laser beam **28** towards mirror **29**. Laser light reflected from mirror **29** travels to holographic unit **204**. Holographic unit **204** diffracts and collimates the light from mirror **29** to illuminate the ground within field of view **148**.

Laser light **28** back scattered from the ground within field of view **148** is depicted by solid lines **46** in FIG. **5**. Back scattered laser light **46** travels from the ground within field of view **148** to holographic unit **204**. Holographic unit **204** diffracts and focuses light **46** through field stop aperture **23**, to detector **22** via focal plane optics **32**.

Processor **141** includes circuitry to control laser **31**, causing laser **31** to emit laser beam **33** towards mirror **36**. Laser light reflected from mirror **36** travels to holographic unit **204**. Holographic unit **204** diffracts and collimates the light from mirror **36** to illuminate the ground within field of view **154**.

Laser light **33** back scattered from the ground within field of view **154** is depicted by dotted lines **52** in FIG. **5**. Back scattered laser light **52** travels from the ground within field of view **154** to holographic unit **204**. Holographic unit **204** diffracts and focuses light **52** through field stop aperture **25**, to detector **24** via focal plane optics **34**.

Processor **141** includes circuitry to process the detected signal from detector **22** and the detected signal from detector **24**, to send a signal to transmitter **47**. Responsive to the signal from processor **141**, transmitter **47** sends a signal to ground station **16**.

Variations on the basic concept include a single laser steered using acousto-optical Bragg deflectors or other means to consecutively select holographic optical elements, instead of multiple lasers to address the various holographic optical elements.

The relevant holographic optical element performance parameters are efficiency, blur circle, focal ratios, scattered light levels, cross-talk, and background light rejection. Diffraction efficiency requirements may limit the number of holographic optical elements that can be multiplexed, and can be traded for an increased number holographic of optical elements and corresponding field of views.

In other alternate embodiments, the transmitter optics used to introduce the transmitted laser beam into the receiver optic axis can be a separate unit for transmitting only. This could be several single hologram, of the same type of multiplexed hologram as the receiver, or other suitabut the focal spots from which the lasers emanate would be offset from the receiver foci. The receiver foci may now be superimposed if desired, so that a single detector can be used for all of the receivers, provided the transmitted pulses from the various lasers are sufficiently separated in time so as not to cause the lidar return signals to overlap.

Preferred embodiments of the invention allow a smaller aperture size for a given flight altitude and laser size. Alternatively, since the technology is scalable to very large (1 meter) sizes, it allows a smaller laser system for a given aircraft altitude or higher altitudes with corresponding wider swath widths on the ground.

Detectors that convert light signals to electrical signals may be located behind the field stops or may instead be spatially displaced from the field stops and light passing through the field stops could travel to the detectors via fiberoptic cables.

FIG. **6** is a diagram for describing how to make holographic unit **4**. Deposit a film emulsion **61** on an optically transparent substrate. Illuminate emulsion **61** with two mutually coherent laser beams **62** and **63**, to create an interference pattern. Beam **62**, generally referred to as the object beam, contains spherical wavefronts emanating from a point source **65**. Beam **63**, generally referred to as a collimated beam or reference beam, contains plane wavefronts. The angle between a line, from the center of emulsion **61** to point source **65**, and the plane of emulsion **61**, during the manufacturing process, corresponds to the angle between holographic unit **4** and detector **22** during the operation of satellite **2**.

In addition, illuminate emulsion **61** with two mutually coherent laser beams **67** and **68**, to create an interference pattern. Beam **67** contains spherical wavefronts emanating from a point source **70**. Beam **68** contains plane wavefronts. The angle between a line, from the center of emulsion **61** to point source **70**, and the plane of emulsion **61**, during the manufacturing process, corresponds to the angle between holographic unit **4** and detector **24** during the operation of satellite **2**.

After exposure to the beams, wash the photo-sensitive material, typically ammonium dichromate, from the emulsion and fix the film's interference pattern by chemical processing commensurate with the type of film emulsion used. In dichromated gelatin, for example, the photo-exposed regions produce molecular cross-links that increase the gelatin hardness and refractive index in those regions.

Although the illustrated embodiments show holograms, residing on a common film, acting as light diffractors, the invention in its broadest sense may be practiced with other types of diffractive optical elements, such as separate holographic films stacked in layers, such as surface holograms, or binary (digital) optical elements.

Additional advantages and modifications will readily occur to those skilled in the art. The invention in its broader aspects is therefore not limited to the specific details, representative apparatus, and illustrative examples shown and described. Accordingly, departures may be made from such details without departing from the spirit or the scope of Applicants' general inventive concept. The invention is defined in the following claims.

What is claimed is:

1. A method comprising:

receiving light from a first field;

responsive to a wavelength received in the previous step, projecting from an optical assembly to a first location;

detecting light projected in the previous step;

receiving light from a second field;

responsive to the wavelength received in the previous step, projecting from the optical assembly to a second location;

detecting light projected in the previous step; and

processing a result of the detecting steps,

wherein the optical assembly is stationary relative to the first location.

2. The method of claim 1, wherein the optical assembly is stationary relative to the second location.

3. The method of claim 1 wherein the projecting steps are performed from a common holographic film.

4. The method of claim 1 further including sending a light signal.

5. The method of claim 4 wherein sending is performed through the optical assembly.

6. The method of claim 4 wherein sending includes sending the light signal along a path between the first location and the optical assembly.

7. The method of claim 1 wherein processing includes determining a wind profile.

8. The method of claim 1 wherein the projecting steps are performed while flying over ground.

9. A system comprising:

a first projector that projects light received from a first field to a first location;

a detector that generates electrical signal responsive to light from the first projector;

a second projector that projects light received from a second field to a second location; and

a processor that receives and processes electrical signals representing light from first and second projectors,

wherein the first and second projectors are stationary relative to the detector.

10. The system of claim 9, wherein the optical assembly is stationary relative to the second location.

11. The system of claim 9 wherein the first and second projects are integral in a common holographic film.

12. The system of claim 9 further including a controlled light source for illuminating the first and second fields.

13. The system of claim 12 wherein the light source is aimed to send light through the first projector.

14. The system of claim 12 wherein the light source is aimed to send light along a path between the first location and the optical assembly.

15. The system of claim 9 wherein the processor includes circuitry that determines a wind profile.

16. The system of claim 9 wherein the system is flying over ground.

17. A system comprising:

first means for receiving light from a first field;

first means responsive to a wavelength received by the first receiving means, for projecting from an optical assembly to a first location;

first means for detecting light projected by the first responsive means;

second means for receiving light from a second field;

second responsive to the wavelength received in the second receiving means, for projecting from the optical system to a second location;

second means for detecting light projected by the second responsive means; and

means for processing signals from the first and second detecting means,

wherein the optical assembly is stationary relative to the first and second detecting means.

* * * * *